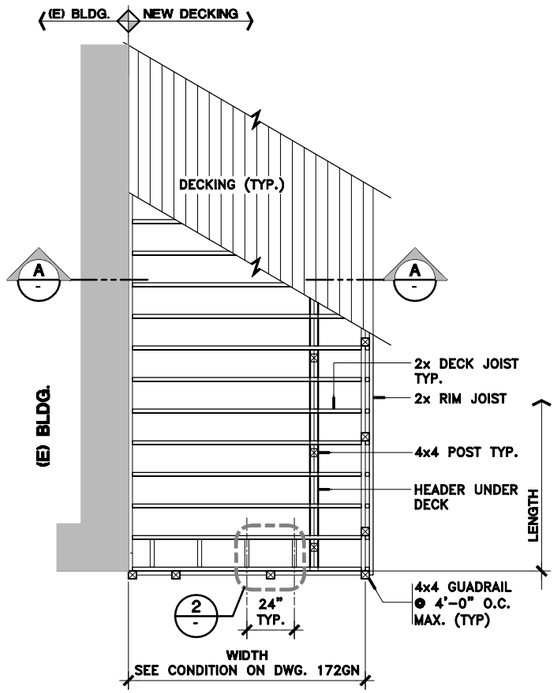

TYPICAL FRAMING PLAN

SEE NOTES ON SHEET NO. 172GN

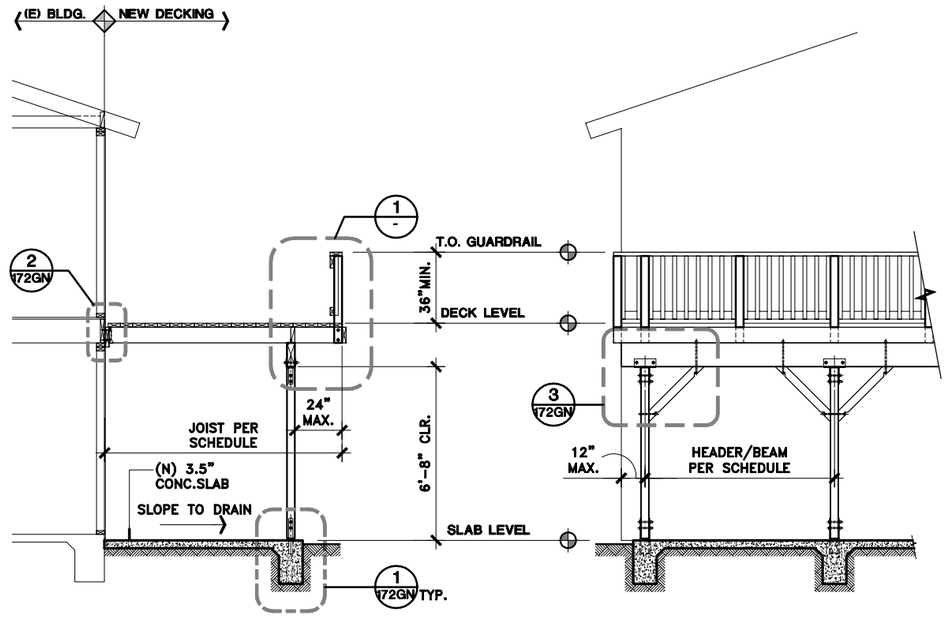

SECTION A-A

ELEVATION

NOTES & LEGEND:

1 — DETAIL NO.
DW# — DWG. NO. 284–172GN

1. SEE TABLE 1 FOR DECK JOIST SCHEDULE ON DWG. 284–172GN
2. SEE TABLE 2 FOR BEAM SCHEDULE ON DWG. 284–172GN
3. SEE TABLE 3 FOR POST/FOOTING SCHEDULE ON DWG. 284–172GN

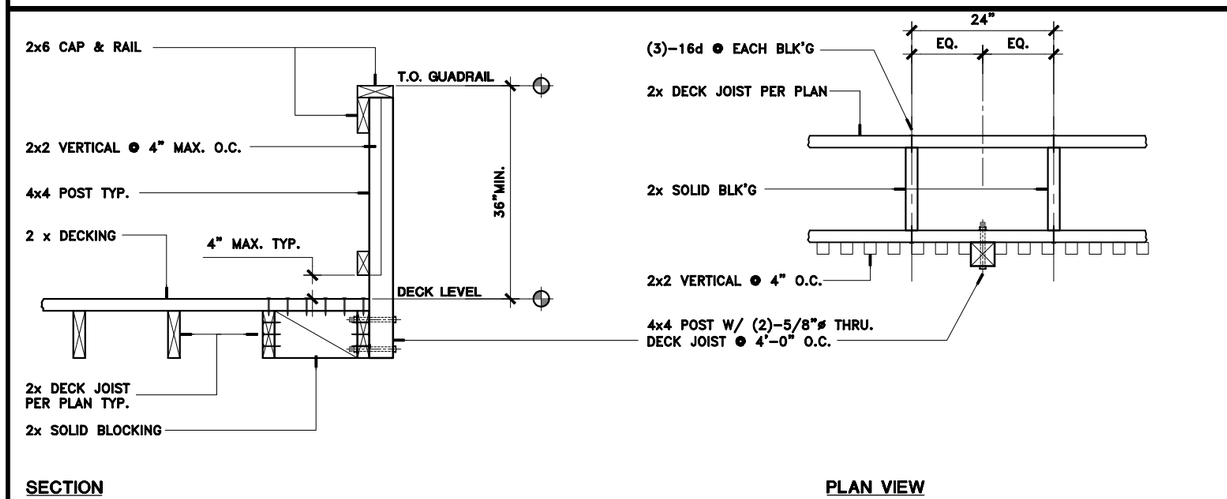

SECTION

PLAN VIEW

2 RAILING / POST & BEAM PARALLEL TO JOIST

XPA-5

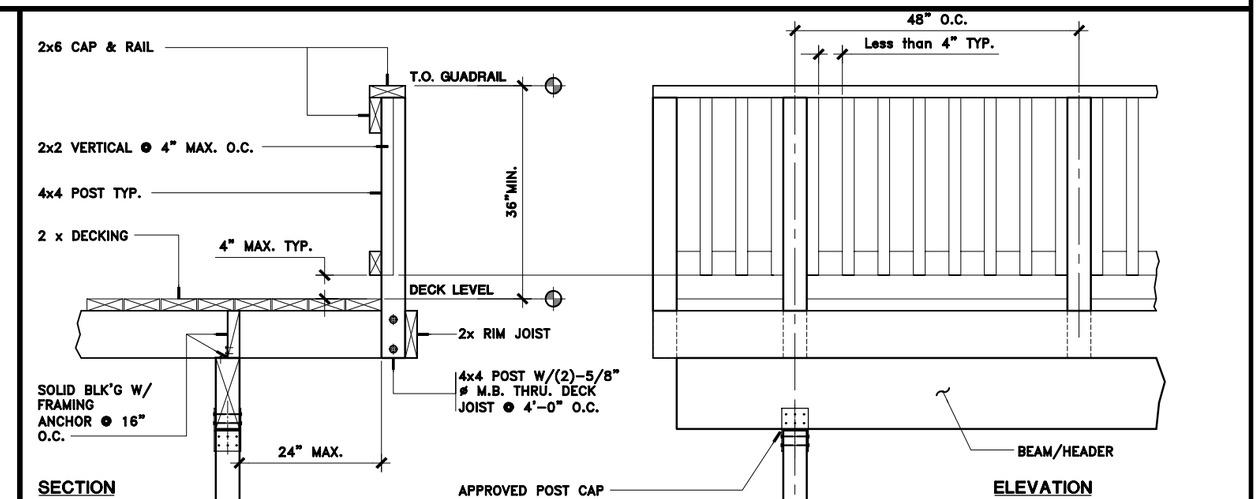

SECTION

ELEVATION

1 RAILING / POST & BEAM PER. TO JOIST

PROJECT : **RESIDENTIAL DECK Construction**	SITE ADDRESS:	Permit No:	Rev.: JUNE 11.2001	DWG. No.: 284
		Issued by:	Appr.by: KS Drawn By: LTN	Sheet 1 of 2
		Date:	[A+GN]	172A

(DEPT. USE ONLY)

GENERAL NOTES:

NOT APPLICABLE FOR TILE ROOF

1. ALL CONSTRUCTION AND QUALITY OF MATERIALS SHALL CONFORM TO THE 1997 UBC.

2. ALL MATERIAL FROM FOOTING EXCAVATION TO BE REMOVED AND SHOULD NOT BE USED UNDER THE SLAB ON GRADE.

3. ANCHOR BOLTS, DOWELS, INSERTS, ETC., SHALL BE SECURELY TIED IN PLACE PRIOR TO POURING CONCRETE.

4. FULLY DIMENSIONED PLOT PLAN SHOWING EXISTING BUILDING MUST BE PROVIDED.

5. SIDE OF RAFTER, BEAM, POST AND FOOTING SHALL BE DETERMINED BY THE DEPARTMENT BY THE INFORMATION ON PLOT PLAN.

STRUCTURAL NOTES:

CONCRETE:

1. ULTIMATE COMPRESSIVE STRENGTH OF CONCRETE @ 28 DAYS SHALL BE 2500 psi. CONCERT SHALL BE A 5 SACK READY – MIX OR MACHINE MIXED WITH 1 PART CEMENT, 1 PART SAND AND NOT MORE THAN 4 PARTS 3/4" GRAVEL. WATER CONTENT SHALL NOT EXCEED 7.5 GALLONS PER SACK OF CEMENT.

2. ALL REINFORCING STEEL TO CONFORM TO ASTM A–615 GRADE 40.

LUMBER:

1. ALL STRUCTURAL LUMBER TO BE DOUGLAS FIR – LARCH OR REDWOOD (ROUGH SAWN OR S4S):
   A. GRADE #2 OR BETTER FOR ALL 2x JOISTS/ RAFTERS/ LEDGERS.
   B. GRADE #1 OR BETTER FOR 4x OR LARGER BEAMS AND POSTS.
   C. CONSTRUCTION GRADE OR BETTER FOR STUDS, PLATES, SILLS & BLOCKINGS.

2. WOOD USED IN CONSTRUCTION OF PERMANENT STRUCTURE AND LOCATED NEAR THAN 6" TO EARTH SHALL BE TREATED WOOD OR REDWOOD.

HARDWARE:

1. BOLT HOLES SHALL BE DRILLED OR PUNCHED. SIZE HOLES 1/16" (MAX) LARGER IN DIAMETER THAN THE NOMINAL SIZE OF BOLT USED.

2. ALL HARDWARE CONNECTORS (NAILS, BOLTS, ETC.) EXPOSED TO WEATHER SHALL BE OF GALVANIZED.

3. A METAL PLATE, METAL STRAP OR WASHER NOT LESS THAN STANDARD CUT WASHER SHALL BE BETWEEN THE WOOD AND BOLTS HEAD AND BETWEEN THE WOOD AND THE NUT.

NAILING SCHEDULE

Table 23-II-B-1 UBC.1997

CONNECTION	NAILING
1. JOIST TO SILL OR GIRDER, TOE NAIL	3–8d
2. BRIDGING TO JOIST, TOENAIL EACH END	2–8d
3. 1x6 SUBFLOOR TO JOIST, FACE NAIL	2–8d
4. WIDER THAN 1x6 SUBFLOOR TO JOIST, FACE NAIL	3–8d
5. 2 INCHES SUBFLOOR OR JOIST OR BLOCKING, FACE NAIL	2–16d
6. SOLE PLATE TO JOIST OR BLKG., FACE NAIL	16d @16"o.c.
SOLE PLATE TO JOIST OR BLKG. @ BRACED WALL PANELS	3–16d@16"o.c.
7. TOP PLATE TO STUD, END NAIL	2–16d
8. STUD TO SOLE PLATE, END NAIL	4–8d,TOENAILS OR 2–16d, END NAIL
9. DOUBLE STUDS, FACE NAIL	16d @24"o.c.
10. DOUBLE TOP PLATES, FACE NAIL	16d @16"o.c.
DOUBLE TOP PLATE @ LAP SPLICE	8–16d
11. BLACKINGS BETWEEN JOISTS OR RAFTERS TO TOP PLATE, TOE NAIL	3–8d
12. RIM JOIST TO TOP PLATE, TOE NAIL	8d @6"o.c.
13. TOP PLATES, LAPS AND INTERSECTIONS, FACE NAIL	2–16d
14. CONTINUOS HEADER, 2 PIECES	16d @ 16"o.c. ALONG EACH EDGE
15. CEILING JOIST TO PLATE, TOE NAIL	3–8d
16. CONTINUOS HEADER TO STUD, TOE NAIL	4–8d
17. CEILING JOIST LAP OVER PARTITION, FACE NAIL	3–16d
18. CEILING JOIST TO PARALLEL RAFTERS, FACE NAIL	3–16d
19. RAFTER TO PLATE, TOE NAIL	3–8d
20. 1 INCHES x BRACE TO EACH STUD & PLATE, FACE NAIL	2–8d
21. 1x8 SHEATHING OR LESS TO EACH BEARING, FACE NAIL	2–8d
22. WIDER THAN 1x8 SHEATHING TO EACH BEARING, FACE NAIL	3–8d
23. BUILT–UP CORNER STUDS	16d @24"o.c.
24. BUILT–UP GIRDER AND BEAM	20d @32" o.c. @ TOP & BOT. AND STAGGERED 2–20d @ EACH ENDS AND @ EACH SPLICE
25. 2 INCHES PLANKS	2–16d @ each bearing
26. WOOD STRUCTURAL PANELS & PARTICLE BOARD (6 INCHES EDGE & 12 INCHES FIELD)	
1/2 INCH AND LESS	6d
19/32 – 3/4 INCH	8d
7/8 – 1 INCH	10d
1–1/8 – 1–1/4 INCHES	10d
27. PANEL SIDING TO FRAMING (CORROSION–RESISTANT SIDING NAILS)	
1/2 INCH AND LESS	6d
5/8 INCH	8d
28. FIBER BOARD SHEATHING	
1/2 INCH AND LESS	6d
25/32 INCH	8d
29. INTERIOR PANELING	
1/4 INCH	4d
3/8 INCH	6d

1. COMMON OR BOX NAILS MAY BE USED EXCEPT WHERE OTHERWISE STATED

2. FOR ALL PANEL NAILING: NAIL @ 6 INCHES O.C., INTERMEDIATE SUPPORT EXCEPT 6 INCHES @ ALL SUPPORTS WHERE SPANS @ EDGES 12 INCHES O.C. @ ARE 48 INCHES OR MORE.

TABLE 1 : DECK JOIST SCHEDULE

SIDE	SPACING	MAX. SPAN	REMARK
2x6	24" O.C.	7'–5"	
	16" O.C.	9'–0"	
2x8	24" O.C.	9'–8"	
	16" O.C.	11'–11"	
4x6	24" O.C.	12'–0"	

TABLE 2 : BEAM SCHEDULE

JOIST LENGTH	BEAM LENGTH			
	8'–0"	10'–0"	12'–0"	
6'–0"	4x8	4x8	4x10	
8'–0"	4x10	4x10	4x12	
10'–0"	4x10	4x12	6x12	
12'–0"	4x12	4x12	6x12	

TABLE 3 : FOOTING SCHEDULE

4x8 BEAM		4x10 BEAM		4x12 BEAM		6x12 BEAM	
EXTERIOR	INTERIOR	EXTERIOR	INTERIOR	EXTERIOR	INTERIOR	EXTERIOR	INTERIOR
12x12	15x15	14x14	17x17	15x15	22x22	17x17	24x24

NOTE:
1. PROVIDED 12" MIN. DEPTH BELOW UNDISTURBED GROUND SURFACE

2. PROVIDE 4x4 POST W/ 4x4 KNEE BRACE FOR 4x BEAM & 6x6 POST W/ 6x6 KNEE BRACE FOR 6x BEAM. SEE DETAIL 3/172GN

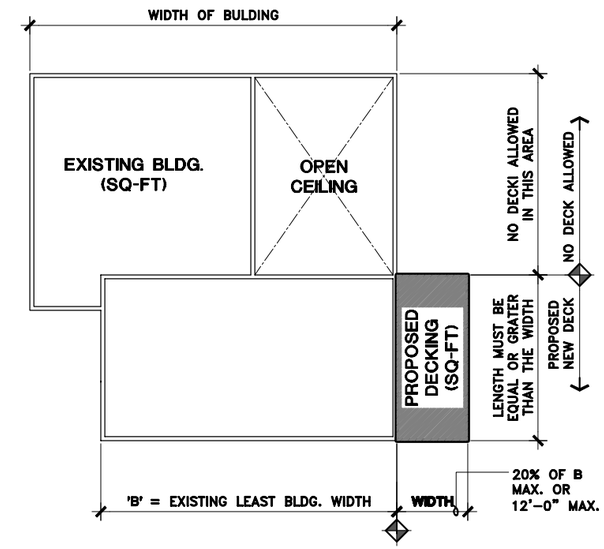

SCHEMATIC PLAN

NOTES:
1. NOT APPLICABLE TO I-JOIST FRAMING OR METAL FRAMING.
2. THE LENGTH MUST BE EQUAL OR GREATER THAN THE WIDTH.
3. PROVIDE KNEE BRACING

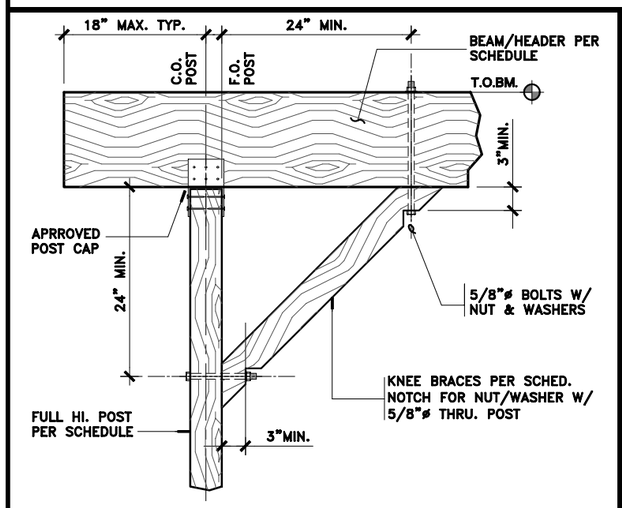

3

XPA–1H0

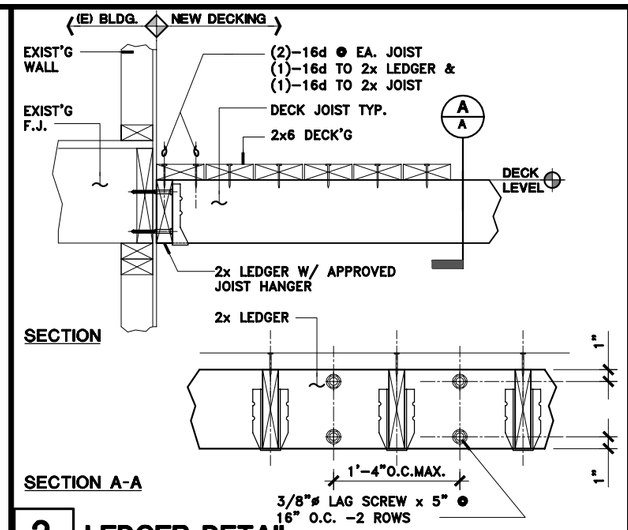

2 LEDGER DETAIL

XPA–3

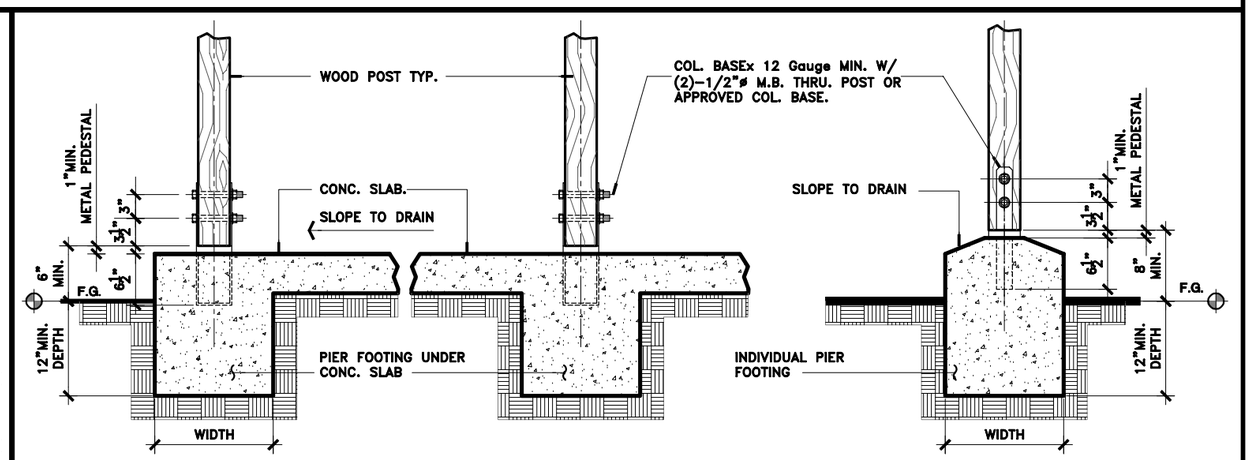

NOTE:
WIDTH= SEE PLAN

1 TYPICAL FOOTING DETAILS

XFT–7A

PROJECT : **RESIDENTIAL DECK Construction**	SITE ADDRESS:	Permit No:	Rev.: JUNE 11.2001
		Issued by:	Appr.by: KS Drawn By: LTN
		Date:	[A+GN]

DWG. No.: 284
Sheet 2 of 2
172GN

(DEPT. USE ONLY)