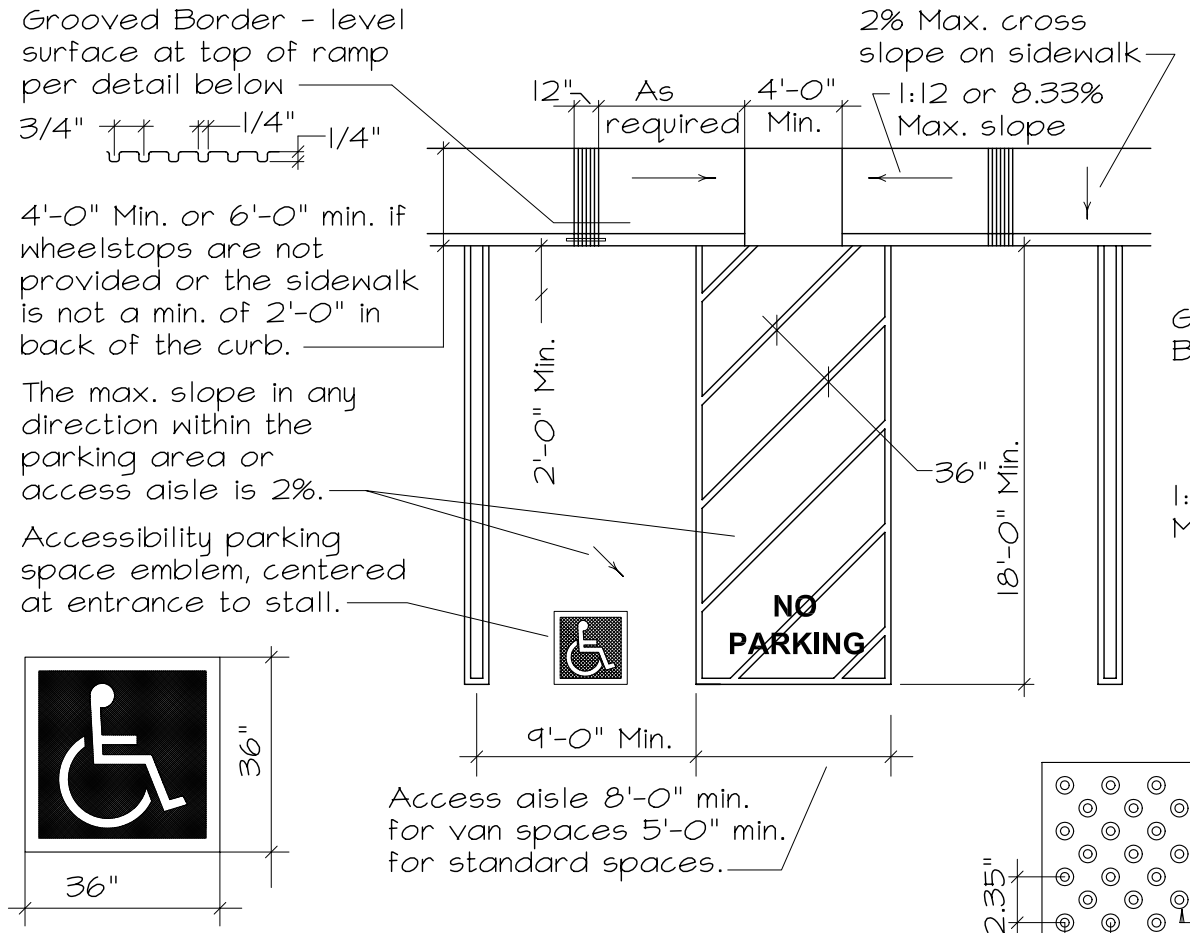

ACCESSIBLE PARKING SPACE DETAIL

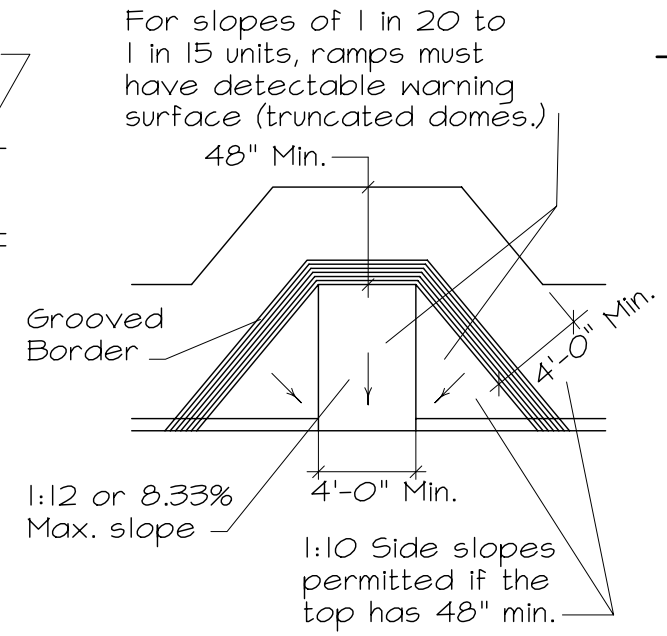

ALT. CURB RAMP

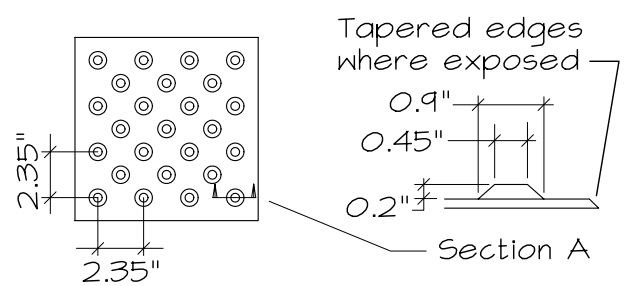

Truncated Domes or Detectable Warning Surface shall be provided when curb ramps are constructed with slopes between 1 in 20 and 1 in 15 (5% to 6.67% slope).

TRUNCATED DOME DETAIL

ACCESSIBLE PARKING NOTES

1. Accessible parking spaces shall be located on the shortest accessible route and such that persons with disabilities are not compelled to wheel or walk behind parked cars other than their own. Section 1129B.4
2. Single spaces shall be designed as detailed on this sheet, with the loading and unloading access aisle on the passenger side of the vehicle. Double spaces are permitted with the access aisle in the center of the two spaces.
3. Entrance to and vertical clearances within accessible levels of parking structures shall be 8'2" to any structural member, duct, or pipe. Section 1130B
4. Curb ramps shall lie, generally, in a single sloped plane, with a minimum of surface warping and cross slope. Section 1127B.5.2
5. A level landing 4 feet deep shall be provided at the upper end of each curb ramp, or the slope of the fanned or flared sides of the curb ramp shall not exceed 1 unit vertical in 12 units horizontal (8.33% slope). Section 1127B.5.4
6. The lower end of each curb ramp shall have a 1/2" lip beveled at 45 degrees as a detectable way-finding edge for persons with visual impairment. Section 1127B.5.5
7. The surface of each curb ramp and its flared sides shall be stable, firm, and slip resistant and shall be of contrasting finish from that of the adjacent sidewalk. Section 1127B.5.6
8. When less than five parking spaces are provided for a building or facility, one shall be 14 feet wide and lined to provide a 9' parking area and a 5' access aisle. However, the space need not be reserved exclusively or identified for use by persons with disabilities. Section 1129B.2
9. Curb ramps shall be located or protected to prevent their obstruction by parked cars. Section 1127B.5.9

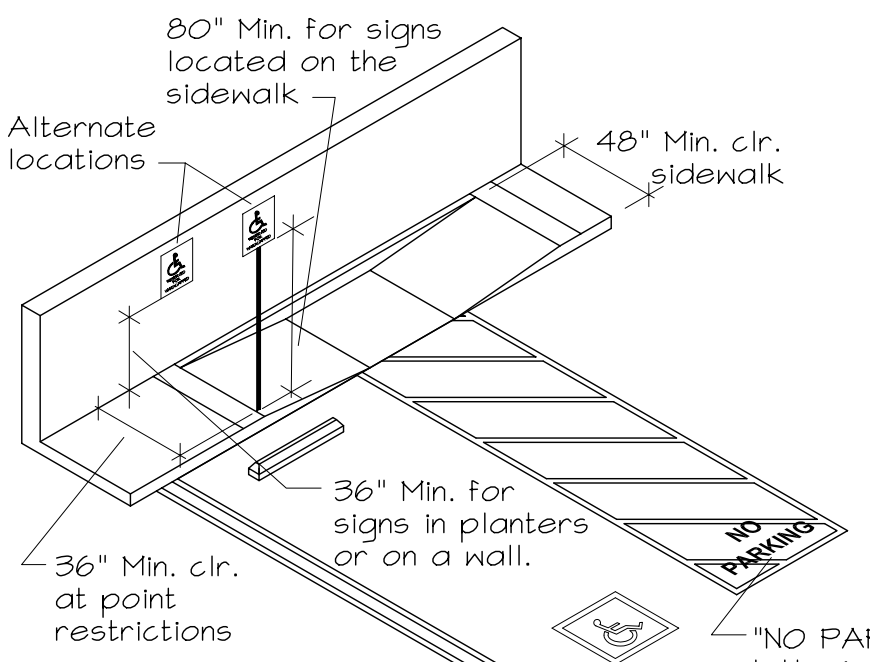

ACCESSIBLE PARKING SPACE SIGNAGE

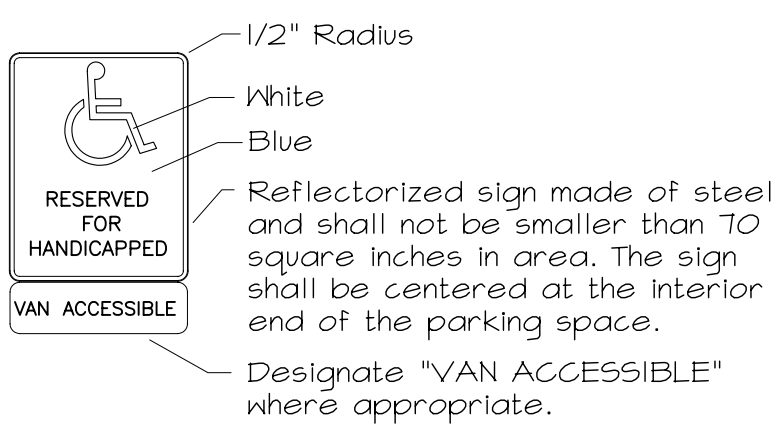

PARKING SPACE SIGN

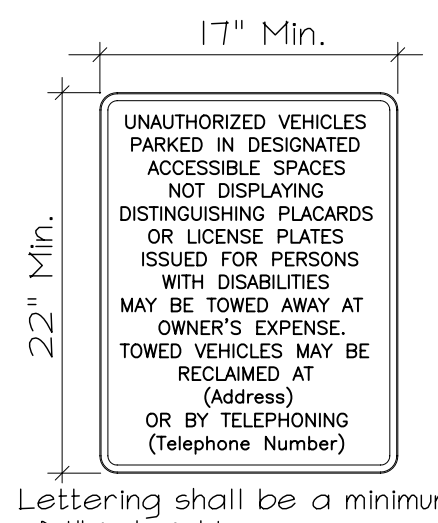

Lettering shall be a minimum of 1" in height.

This sign is required at each accessible parking stall or at the entrance to the parking area.

PARKING AREA SIGN

PARKING PROVIDED	REQUIRED SPACES
1 to 25	1
26 to 50	2
51 to 75	3
76 to 100	4
101 to 150	5
151 to 200	6
201 to 300	7
301 to 400	8
401 to 500	9
501 to 1000	2 % of total

One in every eight accessible spaces, not less than one, shall be van accessible with an 8'0" access aisle.

REQUIRED NUMBER OF ACCESSIBLE SPACES

Project Title:

Project Address:

Project Owner and Address:

Standard Accessibility Notes and Details for Parking and Ramps

The information provided on this sheet is a summary of specific code requirements and is provided to assist in understanding and complying with the code. Completeness of the plans and code compliance remains the responsibility of the applicant.

HC-5

SHEET OF

Date: March 17, 2003 c:\steve\handouts\hc information\hc drawings\hc_5 parking.dwg